Combined Nitrous Oxide and NO_X Abatement in Nitric Acid Plants

by Rainer Maurer and Michael Groves
Uhde, Dortmund, Germany

2005 Technical Committee Meeting of the International Fertilizer Association
Alexandria, Egypt, 11 - 13 April 2005

A company of ThyssenKrupp Technologies Uhde

ThyssenKrupp

Anthropogenic Greenhouse Gases

Concentrations, Lifetimes

Gas	Pre-1750 concentration	Current (2002) tropospheric concentration	GWP (100-year time horizon, Kyoto Protocol)	GWP (100-year time horizon, 2001 estimates)	Atmospheric lifetime (2001 estimates)
Concentrations in parts per million (ppm)					
carbon dioxide (CO_2)	280	372.3	1	1	variable
Concentrations in parts per billion (ppb)					
methane (CH_4)	730	1843	21	23	12
nitrous oxide (N_2O)	270	318	310	296	114
tropospheric ozone (O_3)	25	34	n.a.	n.a.	hours-days

Sources: Blasing, T.J., Jones, S., (2003). *Current greenhouse gas concentrations*. 3pp. US Department of Energy, Carbon Dioxide Information Analysis Center, Oak Ridge National Laboratory, Tennessee, Nov. 2003, in Internet at http://cdiac.esd.ornl.gov/pns/current_ghg.html (on 7th September 2004)
Houghton, J.T., et al. (ed) (1996a). *Climate Change 1995: Contribution of Working Group I to the Second Assessment Report of the Intergovernmental Panel on Climate Change*. 572pp. Cambridge University Press, Cambridge, UK, ISBN: 0521-56433-6, 0521-56436-0
Houghton, J.T., et al. (ed.) (2001). *Climate Change 2001: The Scientific Basis, Contribution of Working Group I to the Third Assessment Report of the Intergovernmental Panel on Climate Change.* 881pp. Cambridge University Press, Cambridge, UK, ISBN 0521 80767 0, 0521 01495 6

A company of ThyssenKrupp Technologies Uhde

ThyssenKrupp

Atmospheric N_2O 1000 A.D. to Present

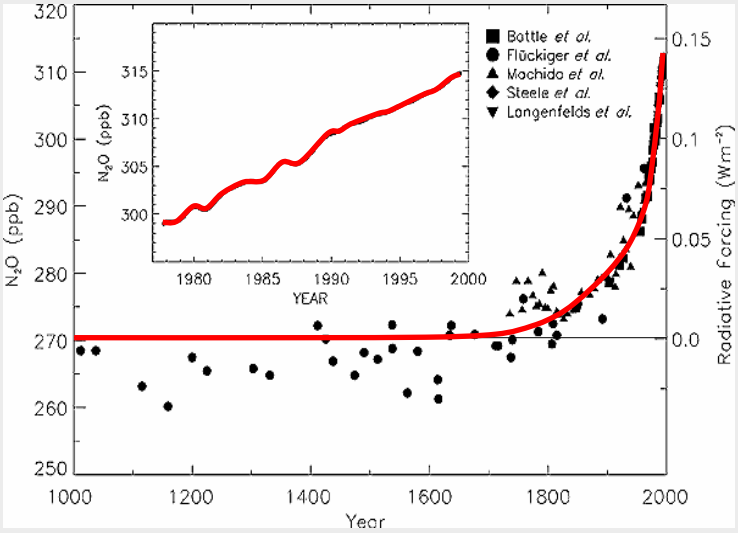

A company of ThyssenKrupp Technologies Uhde

ThyssenKrupp

Global Emissions of N_2O

Natural Sources	**approx.**	**15.0**	**(Million metric tons/year)**
• Soils		9.4	
• Oceans		4.7	
• Atmospheric chemistry		0.9	
Anthropogenic Sources	**approx.**	**12.8**	
• Nitric acid manufacture		**0.4**	
• Adipic acid manufacture		0.2	(down from max. 0.9)
• Combustion of fossil fuels		1.4	
• Combustion of biomass		0.9	
• Manure and human waste		3.3	
• Agriculture (incl. fertilisers)		6.6	
Total Emissions	**approx.**	**27.9**	

Source: Kroeze, C. (1994). *The Science of the Total Environment* **143**, 193-209
Kroeze, C., Mosier, A., and Bouwman, L. (1999). *Global Biochemical Cycles* **13**(1), 1-8

➡ **HNO_3 production now largest industrial process source of N_2O**

A company of ThyssenKrupp Technologies Uhde

ThyssenKrupp

N_2O Formation in Ammonia Oxidation

The amount of N_2O formed depends on conversion conditions:

LP conversion	1 - 1.5 bar	:	4 - 5 kg N_2O / t HNO_3
MP conversion	4 - 6 bar	:	6 - 7.5 kg N_2O / t HNO_3
HP conversion	8 - 10 bar	:	- 20 kg N_2O / t HNO_3

Source: Houghton, J.T., Meira Filho, L.G., Lim, B., Treanton, K., Mamaty, I., Bonduki, Y. and Griggs, D.J.,(eds) (1996b). *Revised 1996 IPCC Guidelines for National Greenhouse Gas Inventories, Reference Manual (Volume 3).* 484pp. Intergovernmental Panel on Climate Change/OECD/IEA/ UK Meteorological Office, Bracknell

NH_3 oxidation on Pt/Rh gauzes and consecutive reactions

(1)	$4\ NH_3 + 5\ O_2 \rightarrow 4\ NO + 6\ H_2O$	~96 %	desired	
(2)	$4\ NH_3 + 3\ O_2 \rightarrow 2\ N_2 + 6\ H_2O$	~2 %	undesired	
(3)	$4\ NH_3 + 4\ O_2 \rightarrow 2\ N_2O + 6\ H_2O$	~2 %	undesired	
(4)	$2\ NH_3 + 8\ NO \rightarrow 5\ N_2O + 3\ H_2O$		undesired	
(5)	$4\ NH_3 + 4\ NO + 3\ O_2 \rightarrow 4\ N_2O + 6\ H_2O$		undesired	

A company of ThyssenKrupp Technologies Uhde

ThyssenKrupp

N_2O Abatement in Nitric Acid Plants

1) "Primary"
2) "Secondary"
3) "Tertiary"

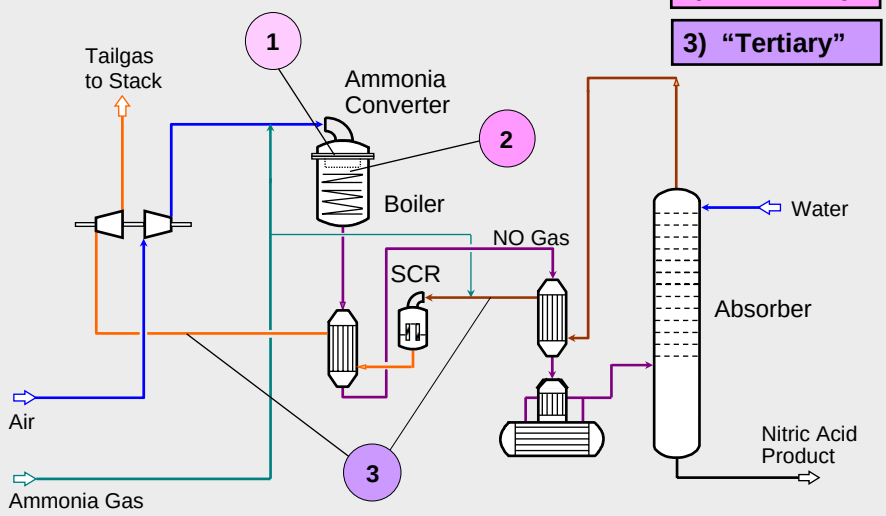

A company of ThyssenKrupp Technologies Uhde

ThyssenKrupp

Reasons for Uhde´s Decision to Develop Tertiary N_2O Abatement

End-of-pipe technology, therefore

- No contact with product - no possiblity of product contamination
- No contact with intermediate product stream - no chance of losses

Physical space not restricted

- Very high rates of N_2O removal possible in principle

A company of ThyssenKrupp Technologies Uhde

ThyssenKrupp

Uhde N_2O / NO_X Abatement R&D Programme

Necessary for Catalyst and Process Development:

- Sources of starting materials:
  - Catalyst manufacturers, universities,....
- Laboratory facilities for catalyst characterisation and testing:
  - Uhde R&D Centre in Ennigerloh, Germany
  - External research institutes and universities
- Long term testing under realistic conditions:
  - Uhde N_2O / NO_X Abatement Catalyst Test Unit in Nitric Acid Production Plant - AMI, Linz, Austria
- Large scale catalyst manufacture

A company of ThyssenKrupp Technologies Uhde

ThyssenKrupp

Uhde N_2O / NO_X Abatement Catalyst Test Unit

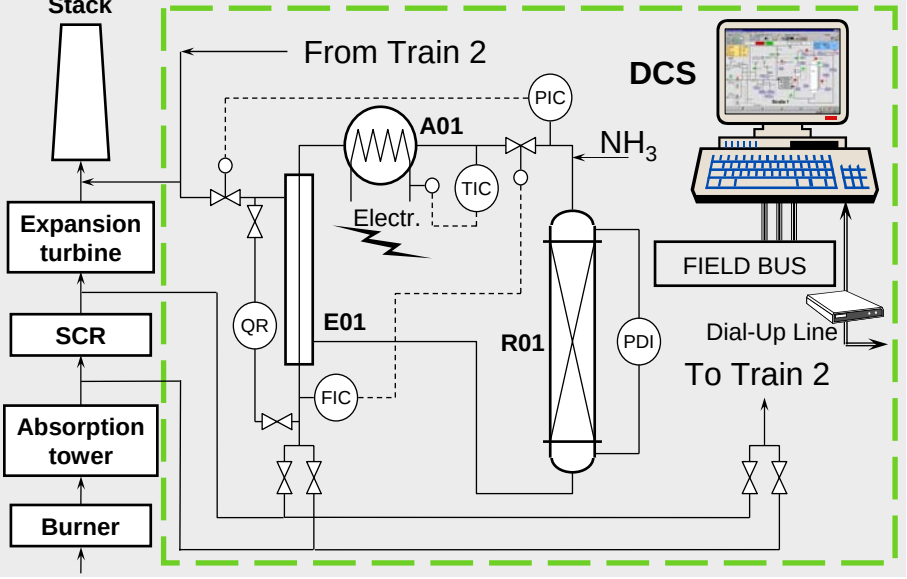

A company of ThyssenKrupp Technologies Uhde

ThyssenKrupp

Uhde N_2O / NO_X Abatement Catalyst Test Unit

A company of ThyssenKrupp Technologies Uhde

ThyssenKrupp

Uhde N_2O / NO_X Abatement Catalyst Test Unit

A company of ThyssenKrupp Technologies Uhde

ThyssenKrupp

N_2O Decomposition - Test Unit Results

- **Activity: Fe-zeolite > Metal oxide > Supported noble metal**

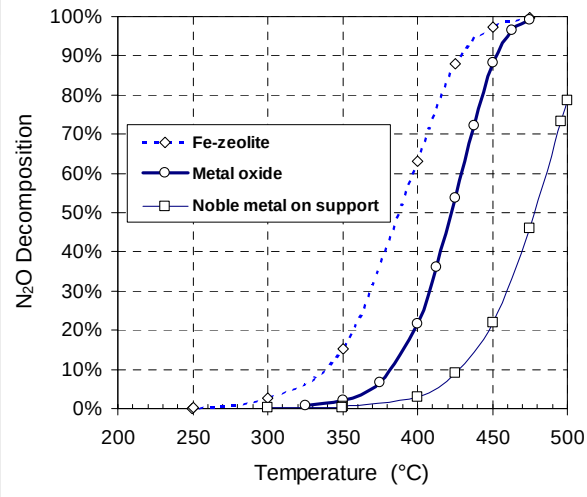

A company of ThyssenKrupp Technologies Uhde

ThyssenKrupp

N_2O Decomposition - Laboratory Results

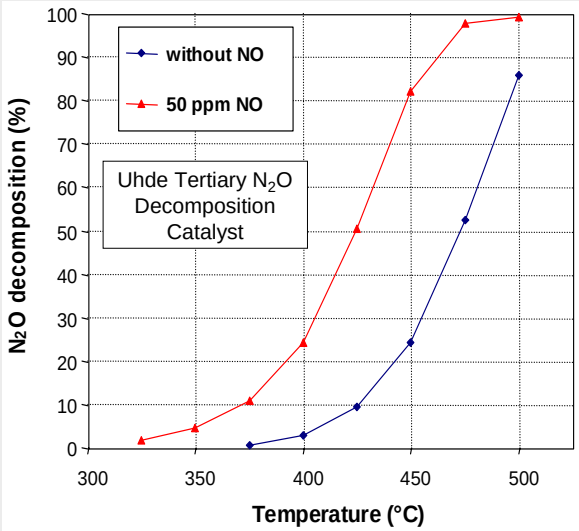

- **NO enhances N_2O decomposition**

A company of ThyssenKrupp Technologies Uhde

ThyssenKrupp

NO_X Reduction with NH_3 - Test Unit Results

NOx Reduction

Possible at temperatures between 180°C and 480°C

- **High rates of NOx removal**
- **Wide temperature range**

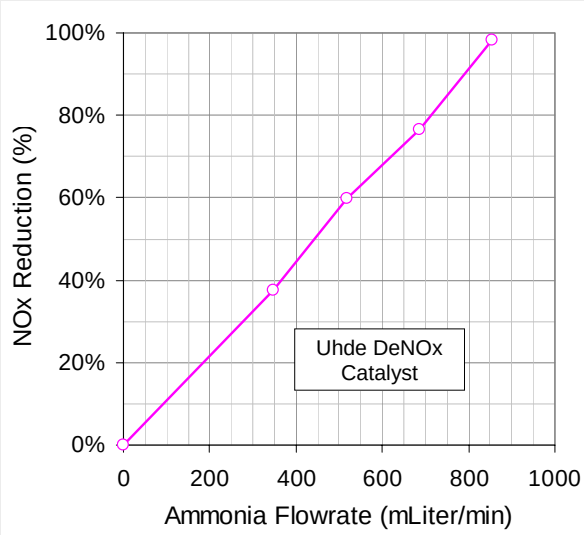

A company of ThyssenKrupp Technologies Uhde

ThyssenKrupp

Uhde N_2O / NOx Abatement Concept

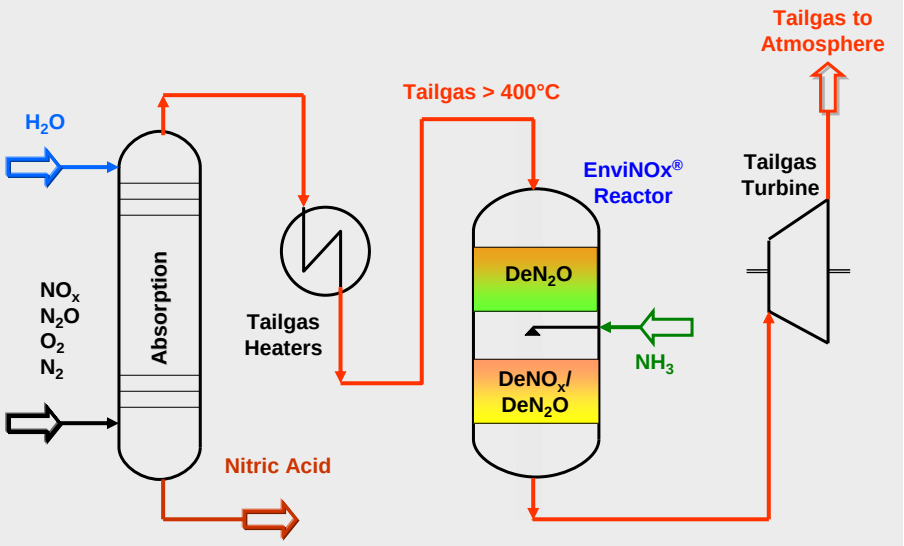

A company of ThyssenKrupp Technologies Uhde

ThyssenKrupp

Uhde N_2O / NOx Abatement Concept

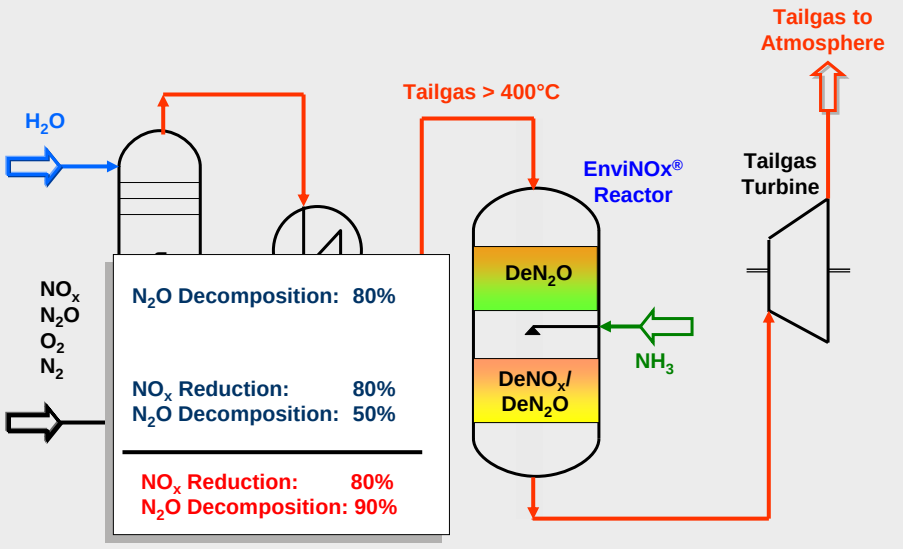

N_2O Decomposition:	80%
NO_x Reduction:	80%
N_2O Decomposition:	50%
NO_x Reduction:	80%
N_2O Decomposition:	90%

A company of ThyssenKrupp Technologies Uhde

ThyssenKrupp

Commercial Scale Realization

- Site: Linz / Austria
- Company:
  Agrolinz Melamine International (AMI)
- Process: Dual Pressure
- Capacity: 1,000 t/d HNO_3
- Tailgas: 120,000 Nm^3/h
- Tailgas Temperature: 435°C

A company of ThyssenKrupp Technologies Uhde

ThyssenKrupp

Erection of EnviNOx® Reactor

A company of ThyssenKrupp Technologies Uhde

ThyssenKrupp

Uhde EnviNOx® Reactor at AMI

Abatement Targets:

- N_2O Removal Rate **90 %**
- 5 t/d N_2O = 1600 t/a N_2O
  ⇒ CO_2 equivalent:
  1600t/a x 310 = **500,000 tCO_2e/a**
- NO_X at Outlet **< 80 ppm**

A company of ThyssenKrupp Technologies Uhde

ThyssenKrupp

Uhde EnviNOx® Reactor - Commercial Scale Realisation

Pressure Drop

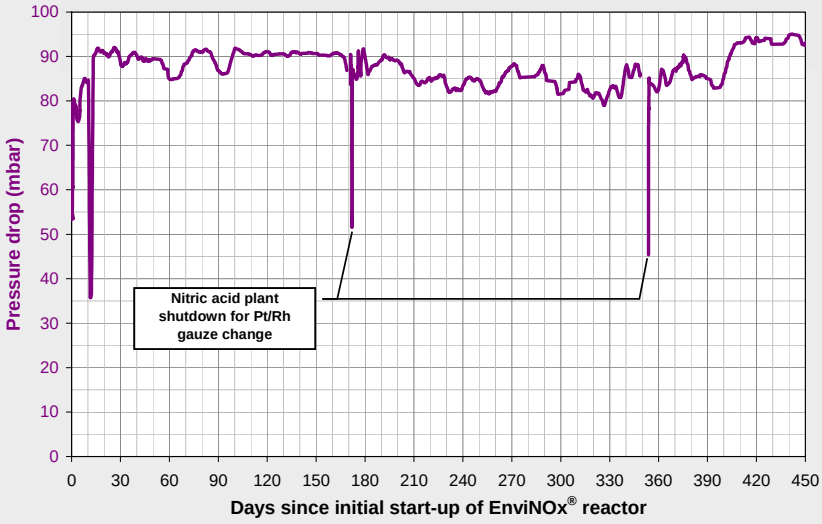

A company of ThyssenKrupp Technologies Uhde

ThyssenKrupp

Uhde EnviNOx® Reactor - Commercial Scale Realisation

NO_X (NO, NO_2) Inlet and Outlet Concentrations

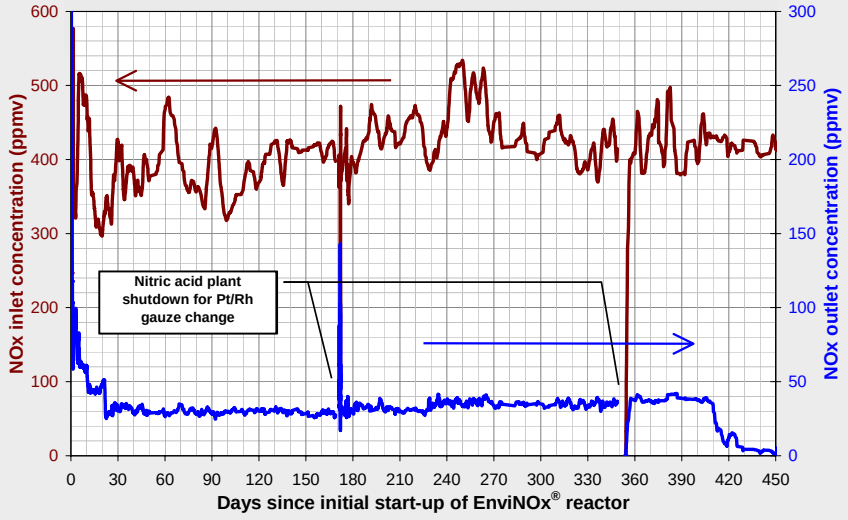

A company of ThyssenKrupp Technologies Uhde

ThyssenKrupp

Uhde EnviNOx® Reactor - Commercial Scale Realisation

NO_X Percentage Rate of Removal

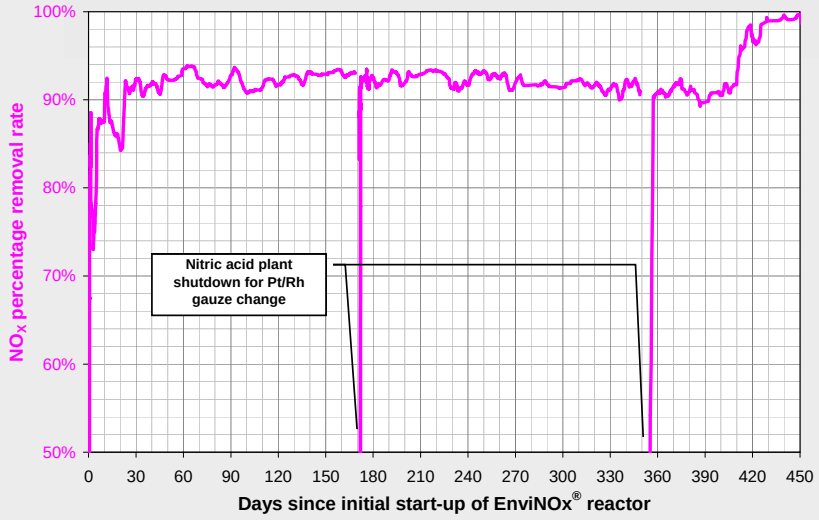

A company of ThyssenKrupp Technologies Uhde

ThyssenKrupp

Uhde EnviNOx® Reactor - Commercial Scale Realisation

N_2O Inlet and Outlet Concentrations

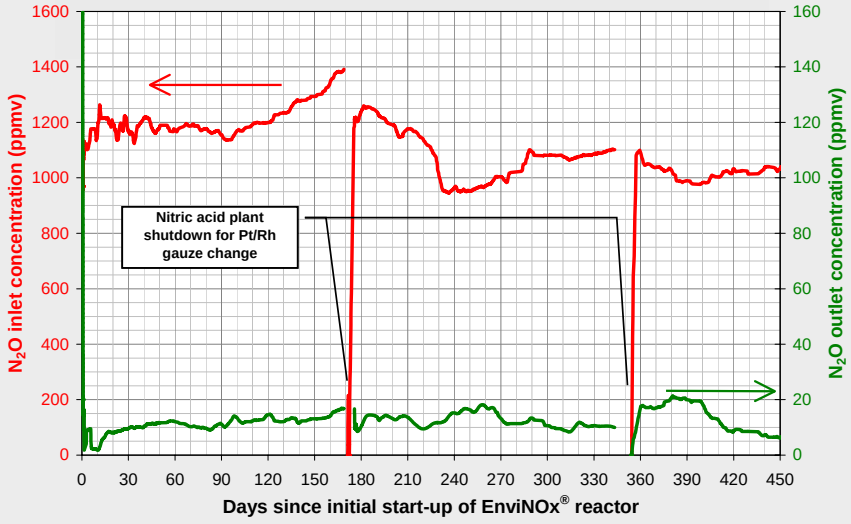

A company of ThyssenKrupp Technologies Uhde

ThyssenKrupp

Uhde EnviNOx® Reactor - Commercial Scale Realisation

N_2O Percentage Rate of Removal

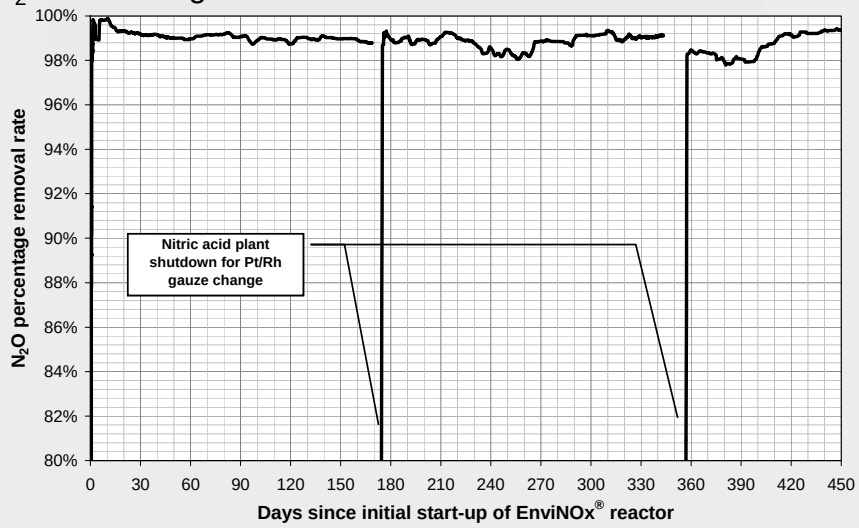

A company of ThyssenKrupp Technologies Uhde

ThyssenKrupp

Contribution to Environmental Protection

Abatement Targets:

- N_2O Removal Rate **90 %**
- 5 t/d N_2O = 1600 t/a N_2O
  ⇒ CO_2 equivalent:
  1600 tN_2O/a x 310= 500,000 tCO_2e/a
- NO_X at Outlet **< 80 ppm**

Achieved in $1^1/_2$ Years of Operation:

- N_2O Removal Rate **98 % - 99 %**
- NO_x at Outlet = **5 - 30 ppm**
  depending on NH_3 feed rate
- no ammonia slip

A company of ThyssenKrupp Technologies Uhde

ThyssenKrupp

N_2O Abatement in Tail Gas
Reduction Technology

- **N_2O decomposition for T >~400°C ⇒ high removal rates**
- **N_2O reduction for T in range ~300°C and ~400°C**
  - Hydrocarbon used to reduce N_2O
  - Hydrocarbon is chemical reagent, not fuel for temperature increase, therefore:
  - Low consumption
    - ⇒ ~0.3 mol HC/mol N_2O
    - ⇒ Additional GHG emissions from hydrocarbon-generated CO_2 only ~0.3% of GHG emission reduction due to N_2O removal)
  - High rates of N_2O removal >90%

A company of ThyssenKrupp Technologies Uhde

ThyssenKrupp

Uhde N_2O / NOx Abatement Concept for T < 400°C

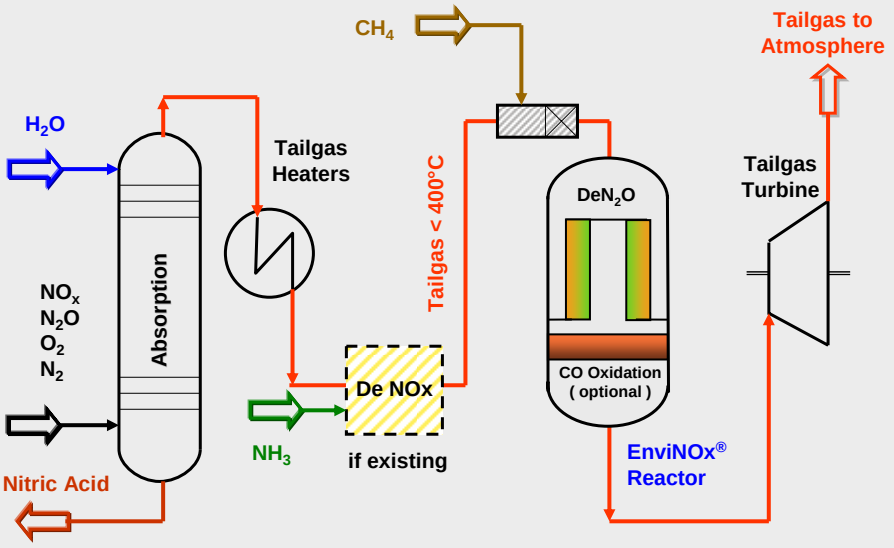

A company of ThyssenKrupp Technologies Uhde

ThyssenKrupp

EnviNOx® Technology for N_2O and NO_X Abatement Features

- **Proven on commercial scale**
- **High rates of N_2O removal**
- **Wide temperature range:**
  - N_2O decomposition for tail gas T>~400°C
  - N_2O reduction with hydrocarbon for tail gas T in range ~300-400°C
- **Moderate consumption of reducing agents**
- **Non-hazardous catalyst material**
- **End-of-pipe process:**
  - No contact with product or intermediate product stream

A company of ThyssenKrupp Technologies Uhde

ThyssenKrupp